Report No.: QCT-CMA-11298.01

Simulation Date: 01/23/19
Report Date: 02/25/19
Retention Date: 01/23/24

NFRC COMPUTER MODELING APPROACH (CMA) COMPUTER SIMULATION

Rendered To:

FreMarq Innovations, Inc.
8300 Highland Drive
Wausau, WI 54401

Project Name:

Zero Sightline Awning Vent

QUAST CONSULTING AND TESTING, INC.
Exterior Façade/Fenestration Consulting & Testing
1055 Indianhead Drive • Mosinee, WI 54455-0241 • Phone: 715-693-TEST (8378) • Fax: 715-693-0689 • www.qcandt.com

Report No.: QCT-CMA-11298.01 **Report Date: 02/25/19**

NFRC COMPUTER MODELING APPROACH (CMA)
COMPUTER SIMULATION

Rendered To:
FreMarq Innovations, Inc.
8300 Highland Drive
Wausau, WI 54401

Project Name:
Zero Sightline Awning Vent

Project Scope:
Quast Consulting and Testing, Inc. (QCT) was contracted by FreMarq Innovations, Inc. to conduct U-Factor, Solar Heat Gain Coefficient and Visible Transmittance computer simulations in accordance with the National Fenestration Rating Council (NFRC) guidelines.

Standards:

ANSI/NFRC 100-2017:	Procedure for Determining Fenestration Product U-Factors
ANSI/NFRC 200-2017:	Procedure for Determining Fenestration Product Solar Heat Gain Coefficient and Visible Transmittance at Normal Incidence

Software:

Frame and Edge Modeling:	THERM 6.3.46
Center of Glass Modeling:	CMAST 1.2.12
Total Product Calculations:	CMAST 1.2.12

Framing Product Line: PL-FMI-6399 - Zero Sightline Awning Vent

Simulated Validation Description:

CMAST Server ID:	P-FMI-80955
Overall U-Factor	0.334
Product Type:	Projected (Awning)
Frame Type:	Aluminum w/ Thermal Breaks - All Members
Sash Type:	Aluminum w/ Thermal Breaks - All Members
Thermal Break:	Not Applicable
Glazing:	GA-CGI-18097: 11298-1/4" 366 / ARG / 3/8" CL - 1 1/8" IG
Spacer-Edge-Seal-Assembly:	SA-NFC-5910: 11298 - Path I, Group 1
Validation Size:	1536.7mm x 952.5mm

Spacer Component:

Path	Group / Spacer Type	Primary Sealant	Secondary Sealant	Desiccant
1	1 - NFRC Generic Aluminum	NA - NFRC Generic	NA - NFRC Generic	NA - NFRC Generic

Reinforcement Description:

Location	Material
N/A	

Edge-of-Glass Material:

Exterior:	N/A
Interior:	Silicone

Finish:

Exterior:	Painted Aluminum
Interior:	Painted Aluminum

Weather-stripping:

Type	Location
Silicone Sweep Gasket	Exterior Sash Perimeter
EPDM Gasket	Interior Sash Perimeter & Frame

Hardware:

Type	Location
None Modeled	

Technical Notes/Modeling Assumptions:

1. Painted and anodized aluminum were grouped, per ANSI/NFRC 100-2017, Table 5-5.

Report No.: QCT-CMA-11298.01 **Report Date: 02/25/19**

NFRC CMA Product Line Sheet

1.

CMAST Server ID:	F-FMI-32916		
Description:	Head		
Cross Section Type:	Head		
Frame Type:	AT - Aluminum w/Thermal Breaks	**Thermal Break:**	FB - Fiberglass
Sash Type:	AT - Aluminum w/Thermal Breaks	**Thermal Break:**	FB - Fiberglass
Projected Frame Dimension (PFD):	3.296		

U-Factor	Low Glazing/Low Spacer	Low Glazing/High Spacer	High Glazing/Low Spacer	High Glazing/High Spacer
Frame	0.270	0.527	0.362	0.546
Edge	0.105	0.212	0.456	0.510

2.

CMAST Server ID:	F-FMI-32917		
Description:	Sill		
Cross Section Type:	Sill		
Frame Type:	AT - Aluminum w/Thermal Breaks	**Thermal Break:**	FB - Fiberglass
Sash Type:	AT - Aluminum w/Thermal Breaks	**Thermal Break:**	FB - Fiberglass
Projected Frame Dimension (PFD):	3.296		

U-Factor	Low Glazing/Low Spacer	Low Glazing/High Spacer	High Glazing/Low Spacer	High Glazing/High Spacer
Frame	0.269	0.528	0.365	0.547
Edge	0.105	0.213	0.456	0.511

3.

CMAST Server ID:	F-FMI-32918		
Description:	Jamb		
Cross Section Type:	Jamb		
Frame Type:	AT - Aluminum w/Thermal Breaks	**Thermal Break:**	FB - Fiberglass
Sash Type:	AT - Aluminum w/Thermal Breaks	**Thermal Break:**	FB - Fiberglass
Projected Frame Dimension (PFD):	3.296		

U-Factor	Low Glazing/Low Spacer	Low Glazing/High Spacer	High Glazing/Low Spacer	High Glazing/High Spacer
Frame	0.269	0.530	0.365	0.548
Edge	0.105	0.213	0.455	0.510

Component values included in this report are for submittals to an NFRC-licensed IA and are not meant to be used directly for labeling purposes. Only those values approved and identified on a valid CMA Label Certificate are to be used for labeling purposes. The rating values were rounded in accordance to the NFRC unit conversions and rounding policy document (NFRC 601-2017).

Quast Consulting and Testing, Inc. is an NFRC accredited simulation laboratory and all simulations were conducted in full compliance with NFRC approved procedures. The NFRC procedure requires that the computational results be verified through physical testing.

Detailed drawings, simulation data files, a copy of this report and other pertinent project documentation will be retained by Quast Consulting and Testing, Inc. for a period of four years from the original test date. At the end of this retention period, such materials shall be discarded without notice and the service life of this report will expire. Results obtained are simulated values and were secured by using the designated simulation methods. This report does not constitute certification of this product nor an opinion or endorsement by this laboratory. This report is the exclusive property of the client so named herein and represents only the product simulated. This report may not be reproduced, except in full, without the written consent of Quast Consulting and Testing, Inc.

This report is not complete without all attachments (11); see Appendix.

Stephanie Skoglund
Simulator-In-Responsible-Charge

Jeff Zibton
NFRC Certified Simulator

Revision Log

Revision No.	Date	Description
.01	02/25/19	- Original report issued.

Appendix

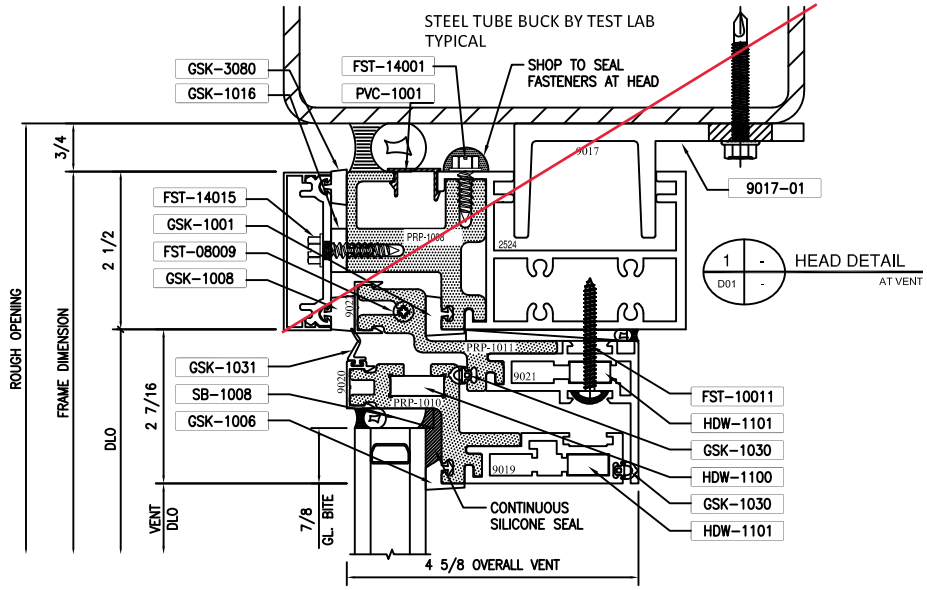

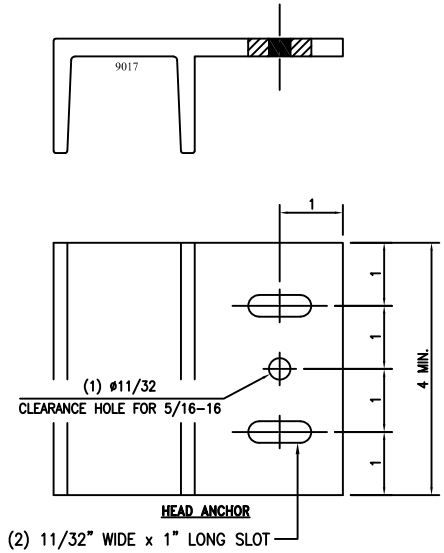

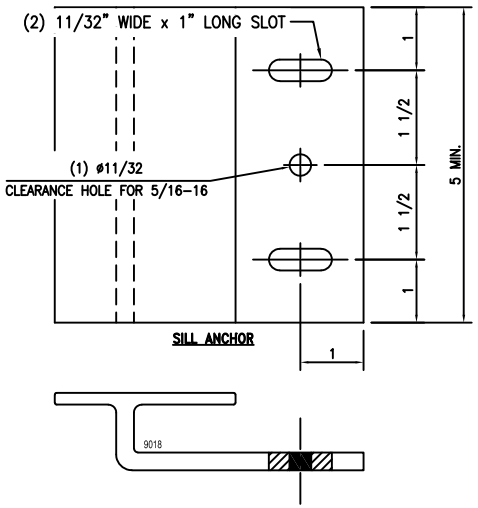

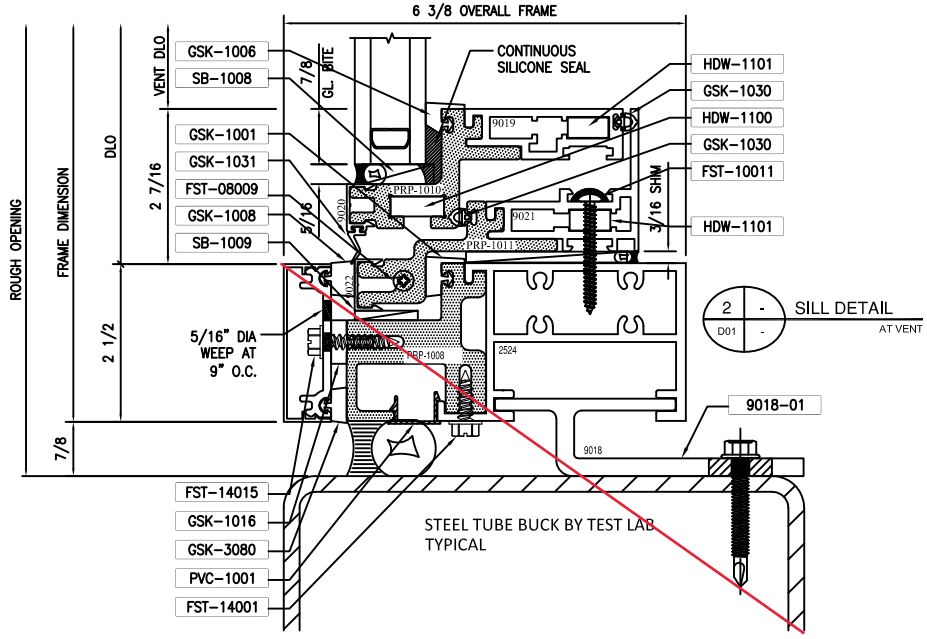

TRIM TAGS KEY

9017-01	HEAD ANCHOR 6063-T6 4" WIDE LOCATION: 1 CLIP PER VERTICAL 1 CLIP AT JAMBS
9018-01	SILL ANCHOR 6063-T6 5" WIDE LOCATION: 1 CLIP PER VERTICAL 1 CLIP AT JAMBS
UIF FST-08009	#8 x 1 1/2" PH PAN HD SMS 4 PER VENT (1 AT EACH CORNER)
UIF FST-10011	#10 x 1 3/4" PH PAN HD SMS AT JAMBS ONLY @ 18" O.C. MAX
UIF FST-14001	#14 x 3/4" HWH SMS AT 16" O.C. MAX
UIF FST-14009	#14 x 2" HWH TEX FRAMING FASTENER
UIF FST-14015	#14 x 1" HWH SMS TYPE A AT 9" O.C. PRESSURE PLATE
UIF GSK-1001	INTERIOR GLAZING SPACER 60 DUROMETER EPDM [LN. FT.]
UIF GSK-1006	70 DUROMETER SILICONE GASKET [LN. FT.]
UIF GSK-1008	EXTERIOR GLAZING GASKET 60 DUROMETER EPDM GASKET
UIF GSK-1016	STEM ISOLATOR 70 DUROMETER EPDM GASKET
UIF GSK-1030	WEATHER STRIP 70 DUROMETER EPDM
UIF GSK-1031	PERIMETER SWEEP GASKET ~~70 DUROMETER EPDM~~ Silicone
UIF GSK-3080	EXTERIOR GLAZING SPACER 60 DUROMETER EPDM GASKET
UIF SB-1008	5/16" x 1 1/8" x 4" 85 DUROMETER BLACK SILICONE SETTING BLOCK (2) PER LITE
UIF SB-1009	1/8" x 1" x 4" BLACK SILICONE SETTING BLOCK (2) PER LITE
UIF PVC-1001	CAULK BACKER
UIF HDW-1101	FRAME CORNER KEY AND SASH CORNER KEY 1
UIF HDW-1100	SASH CORNER KEY 2

REV. NO.	DATE	DRAWN	SUBMITTAL/REVISION DESCRIPTIONS

PROJECT NAME:
LOCATION:
ARCHITECT:
CUSTOMER:
REPRESENTATIVE:

FreeWave Innovations, Inc
6500 Highland Drive
Wauseon, WI 54401
PHONE (715) 845-8502

General Notes:
1. Contractor to verify all dimensions in the field. All framing will be manufactured to
2. Architect is responsible for providing all dimensions to contract documents and if required provide correct details
3. Contractor is responsible for providing all dimensions to contract documents and if required provide correct details
4. Contractor is responsible for providing all dimensions to contract documents and if required provide correct details

JOB
CUST. ORDER NO.
SHEET NAME
PERFORMANCE MOCK-UP DETAILS
SCALE HALF
DATE 12/13/18
DRAWN BY Ed Gerl
SHEET NO. D01

Buck, wall and hardware not modeled. Only the vent was modeled

Drawings represent model as simulated

Quast Consulting & Testing Inc.

QCT-CMA-11298.01
02/25/19 Reviewer: SS

TRIM TAGS KEY

9017–01	HEAD ANCHOR 6063-T6 4" WIDE LOCATION: 1 CLIP PER VERTICAL 1 CLIP AT JAMBS
9018–01	SILL ANCHOR 6063-T6 5" WIDE LOCATION: 1 CLIP PER VERTICAL 1 CLIP AT JAMBS
UIF FST–08009	#8 x 1 1/2" PH PAN HD SMS 4 PER VENT (1 AT EACH CORNER)
UIF FST–10011	#10 x 1 3/4" PH PAN HD SMS AT JAMBS ONLY @ 18" O.C. MAX
UIF FST–14001	#14 x 3/4" HWH SMS AT 16" O.C. MAX
UIF FST–14009	#14 x 2" HWH TEX FRAMING FASTENER
UIF FST–14015	#14 x 1" HWH SMS TYPE A AT 9" O.C. PRESSURE PLATE
UIF GSK–1001	INTERIOR GLAZING SPACER 60 DUROMETER EPDM [LN. FT.]
UIF GSK–1006	70 DUROMETER SILICONE GASKET [LN. FT.]
UIF GSK–1008	EXTERIOR GLAZING GASKET 60 DUROMETER EPDM GASKET
UIF GSK–1016	STEM ISOLATOR 70 DUROMETER EPDM GASKET
UIF GSK–1030	WEATHER STRIP 70 DUROMETER EPDM
UIF GSK–1031	PERIMETER SWEEP GASKET ~~70 DUROMETER EPDM~~ Silicone
UIF GSK–3080	EXTERIOR GLAZING SPACER 60 DUROMETER EPDM GASKET
UIF SB–1008	5/16" x 1 1/8" x 4" 85 DUROMETER BLACK SILICONE SETTING BLOCK (2) PER LITE
UIF SB–1009	1/8" x 1" x 4" BLACK SILICONE SETTING BLOCK (2) PER LITE
UIF PVC–1001	CAULK BACKER
UIF HDW–1101	FRAME CORNER KEY AND SASH CORNER KEY 1
UIF HDW–1100	SASH CORNER KEY 2

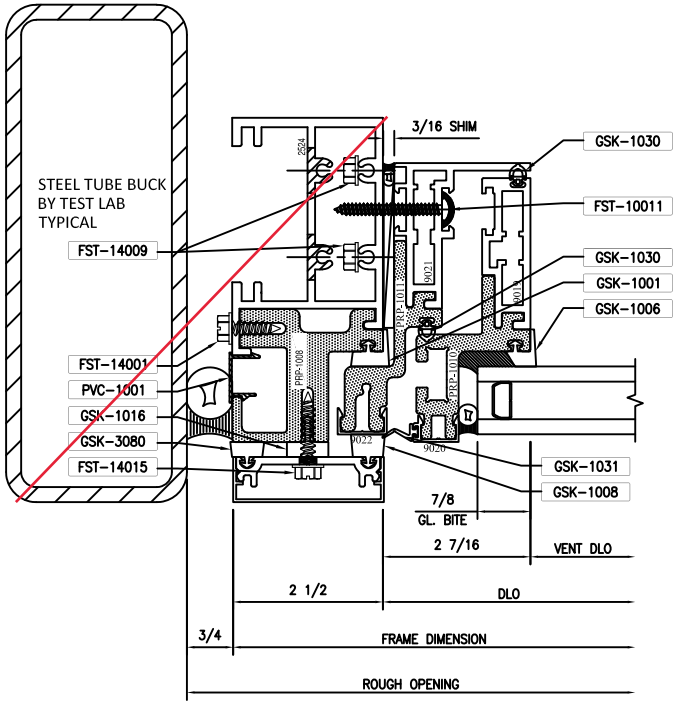

3 - D02 - LEFT JAMB DETAIL AT VENT

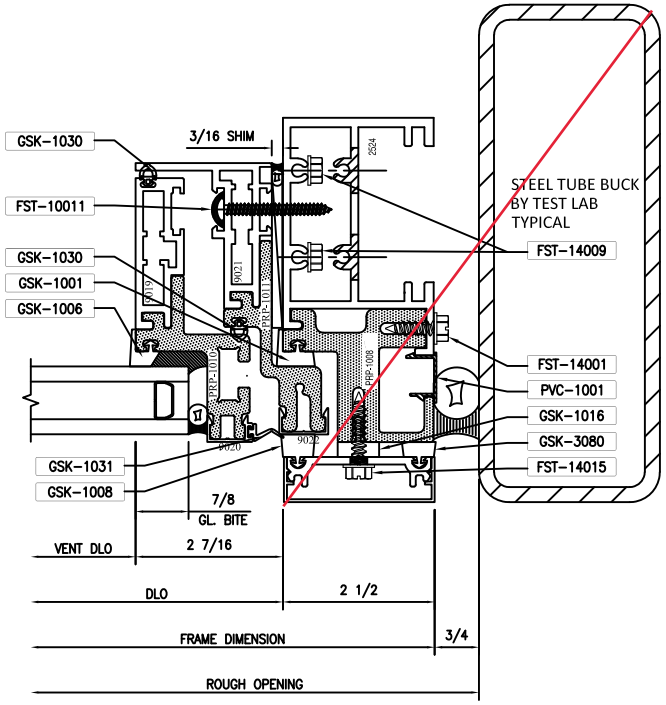

4 - D02 - RIGHT JAMB DETAIL AT VENT

PROJECT NAME:
LOCATION:
ARCHITECT:
CUSTOMER:
REPRESENTATIVE:

REV. NO.	DATE	DRAWN	SUBMITTAL/REVISION DESCRIPTIONS

PreWarq Innovations, Inc
9300 Jordan Drive
Schofield, WI 54476
PHONE (715) 845-8848

General Notes:
1. Contractor to verify all dimensions in the field. All framing will be manufactured to
2. The architect to review all specifications to contract documents and if required provide correct details
and/or dimensions to ensure proper installation.
3. Shop drawings are to be reviewed and approved by the architect prior to fabrication.
4. Fabrication and installation of this product shall be interpreted as an accepted condition of job
acceptance and shall be regarded as final approval of shop drawings by fabrication.
5. PreWarq Inc. shall not be responsible for any errors and/or omissions from the use of these drawings by
other trades.

JOB MOCK–UP
CUST. ORDER NO.
SHEET NAME PERFORMANCE MOCK–UP DETAILS
SCALE HALF
DATE 12/19/18
DRAWN BY Ed Geri
SHEET NO. D02

Buck, wall and hardware not modeled. Only the vent was modeled

Drawings represent model as simulated

Quast Consulting & Testing Inc.

QCT-CMA-11298.01
02/25/19 Reviewer: SS

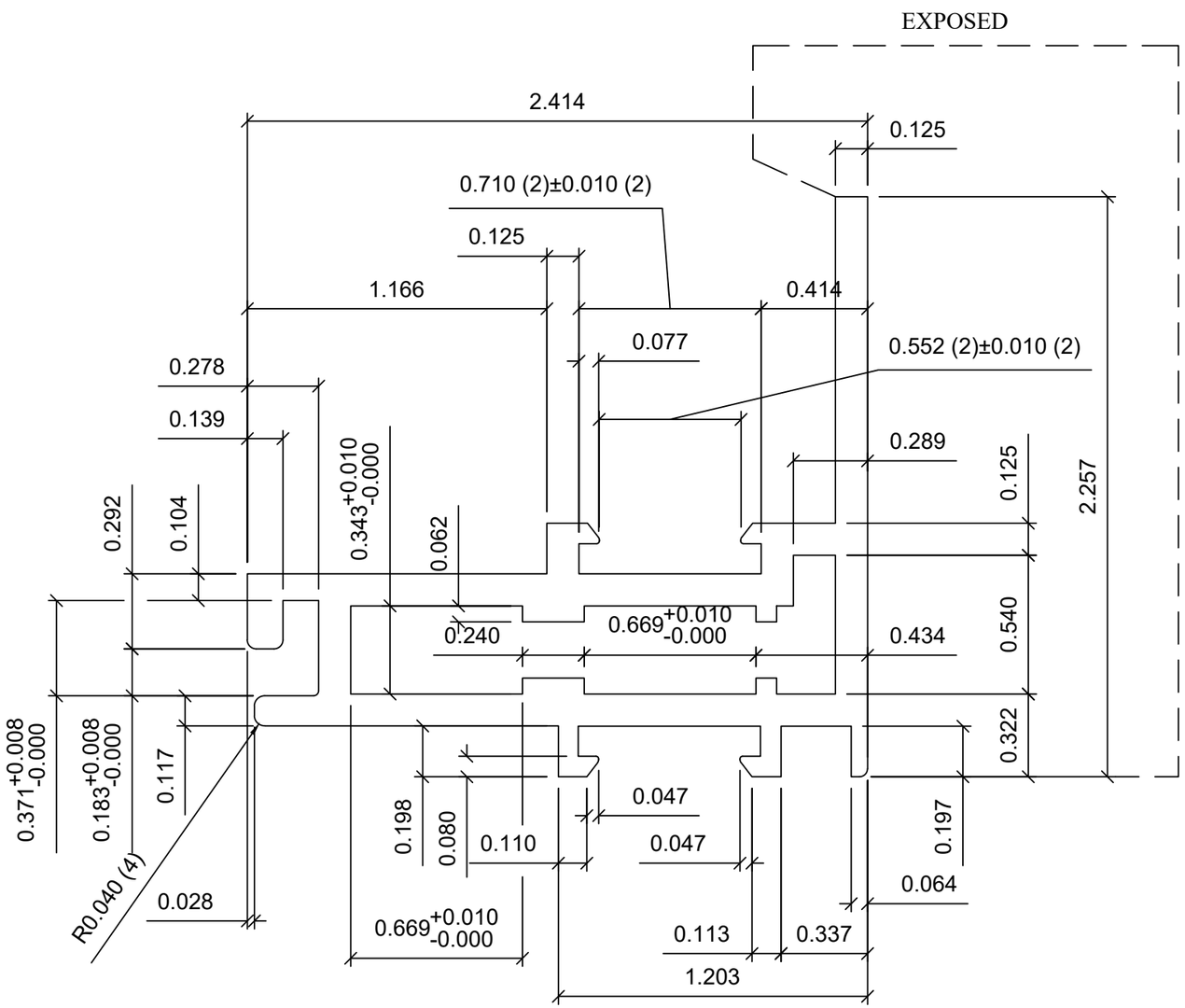

SCALE = 2X

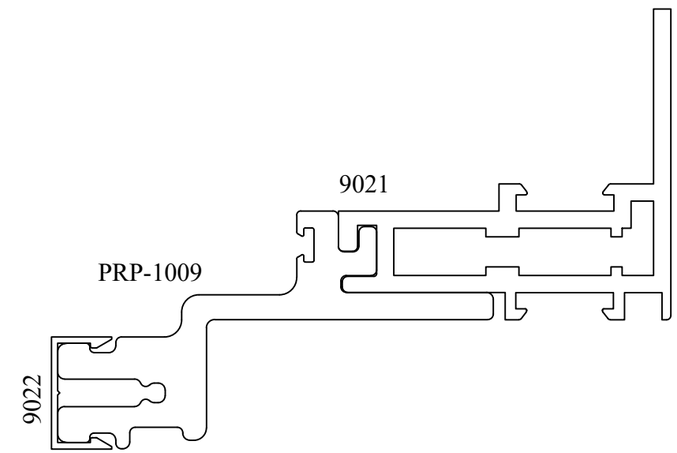

ASSEMBLY DETAIL
SHOWN ACTUAL SIZE

Drawings represent model as simulated

Quast Consulting & Testing Inc.

QCT-CMA-11298.01
02/25/19 Reviewer: SS

MATERIAL: ALUM ALLOY 6063-T6		FreMarq Innovations 8300 Highland Drive Wausau, WI 54401	TITLE: ZERO SIGHTLINE FRAME
TOLERANCE: INDUSTRY STANDARD			DRAWN BY: TAF
Perimeter = 11.804"	RADIUS: .020" UNO		DATE: 7-12-18
AREA= 1.037	WEIGHT= 1.244 lb/ft		PART NO. 9021

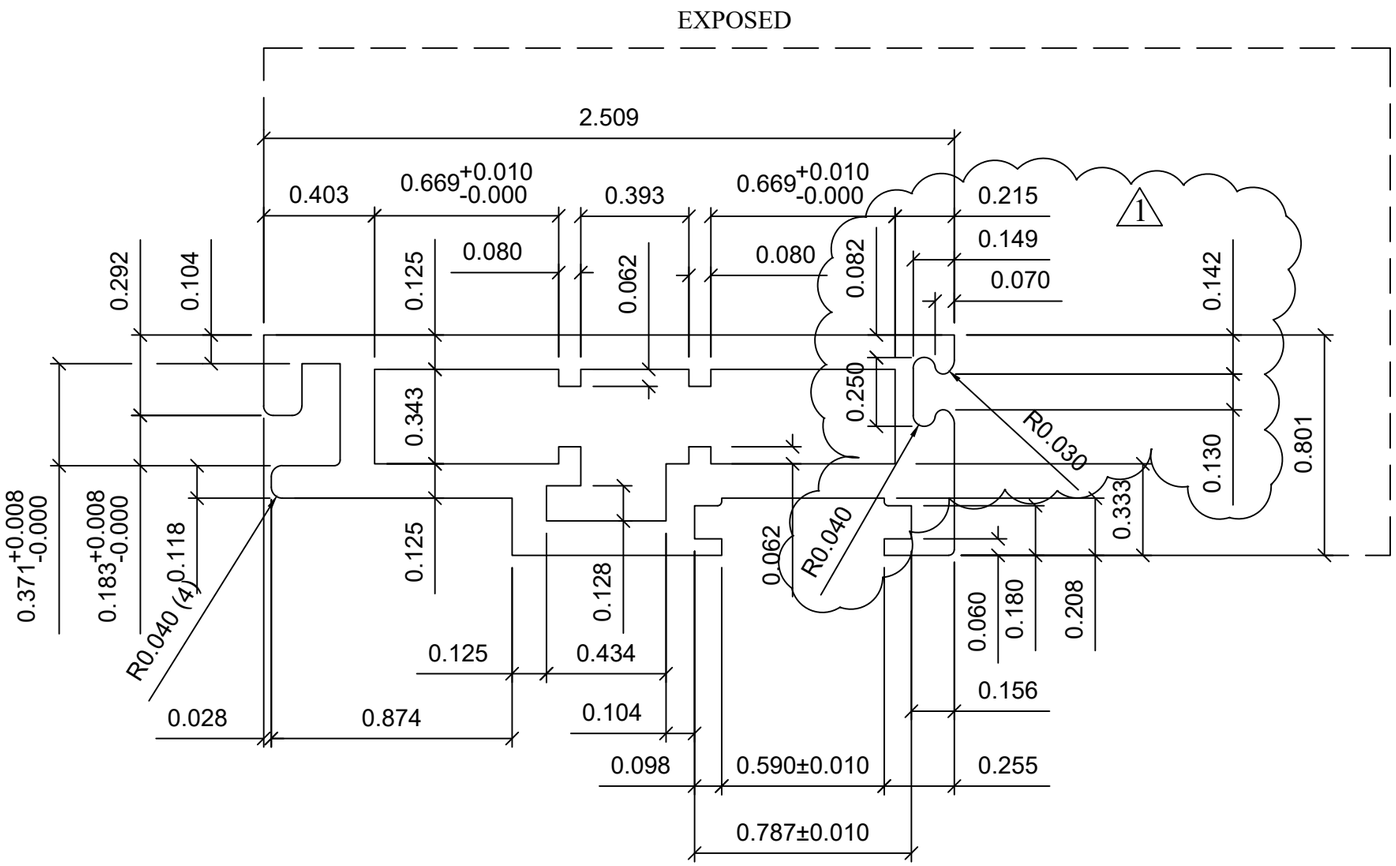

SCALE = 2X

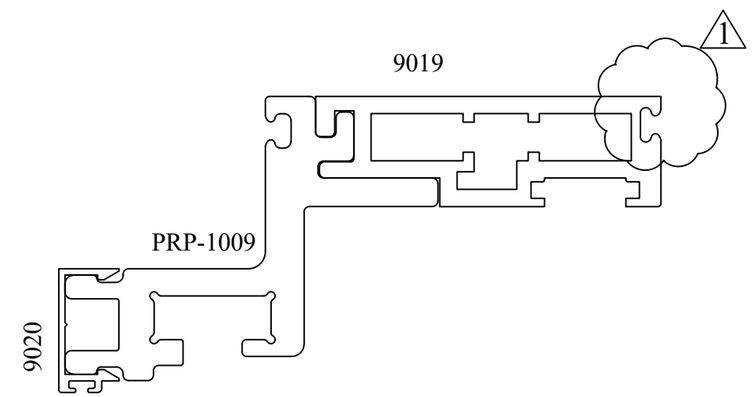

ASSEMBLY DETAIL
SHOWN ACTUAL SIZE

Drawings represent model as simulated
Quast Consulting & Testing Inc.
QCT-CMA-11298.01
02/25/19 Reviewer: SS

REV. NO.	DATE	DESCRIPTION	MATERIAL: ALUM ALLOY 6063-T6		FreMarq Innovations	TITLE: ZERO SIGHTLINE SASH	
1	8/20/18	REVISED GASKET RECEIVER POCKET	TOLERANCE: INDUSTRY STANDARD		8300 Highland Drive Wausau, WI 54401	DRAWN BY: TAF	
△			Perimeter =	RADIUS: .020" UNO		DATE: 7-12-18	
△			AREA= 0.848	WEIGHT= 1.018 lb/ft		PART NO.	9019

Drawings represent model as simulated

Quast Consulting & Testing Inc.

QCT-CMA-11298.01
02/25/19 Reviewer: SS

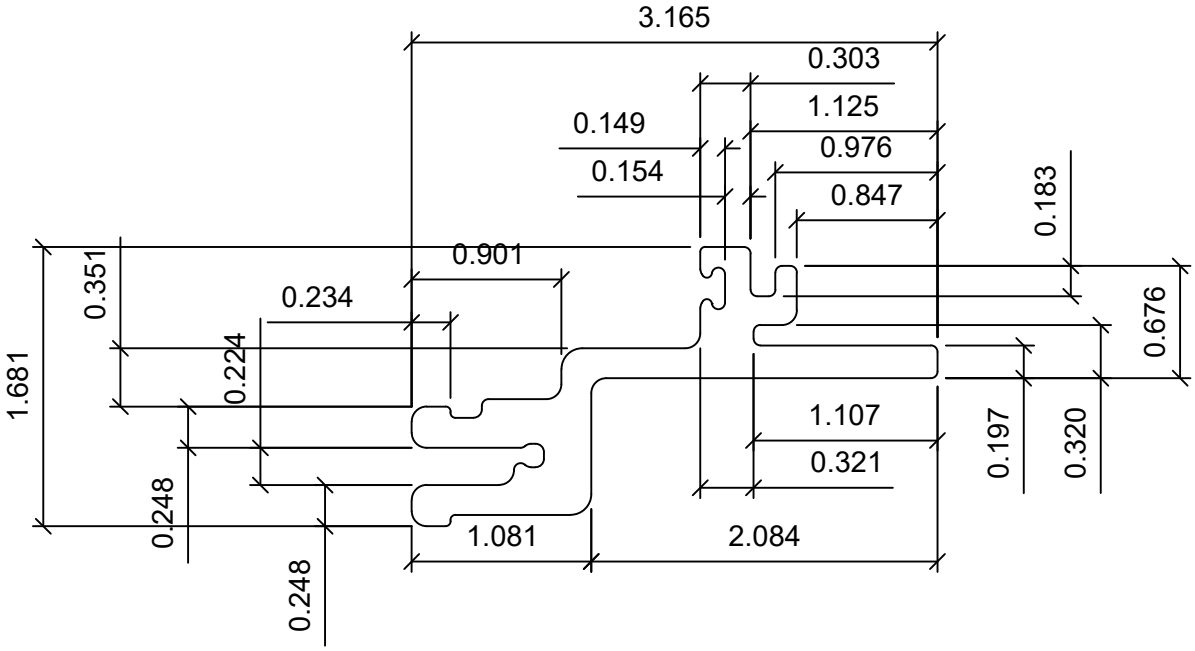

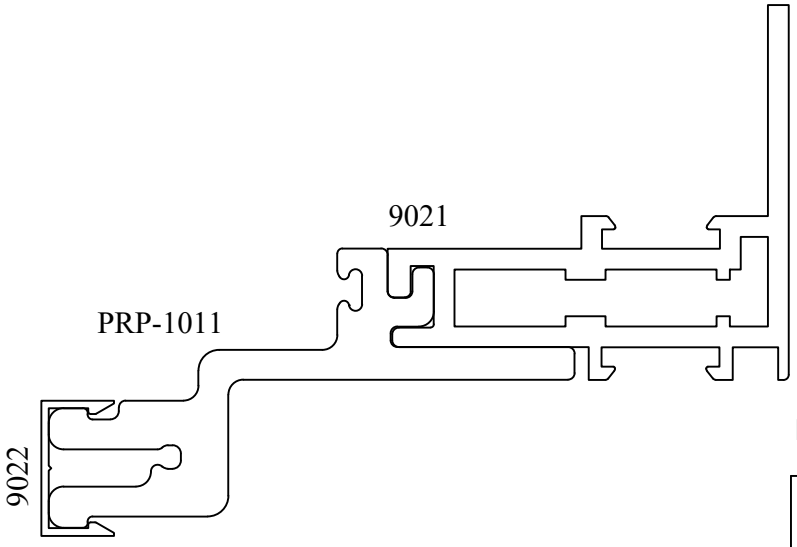

Deceuninck part #D10000170

FreMarq Innovations
PO BOX 512
MERRILL, WI 54452
8300 HIGHLAND DR.
WAUSAU, WI 54401

MATERIAL: DECEUNINCK ROVEX FIBERGLASS Baydur-PUL-2500

NO.	DATE	DESCRIPTION
△		
△		

Project Name: Vent Window

DRAWN BY: TAF

DATE: 7-12-18

TOLERANCE: INDUSTRY STANDARD	Perimeter = 12.004 in.	AREA= 1.249 SQ.IN.	DRWG. NO.	PRP-1011

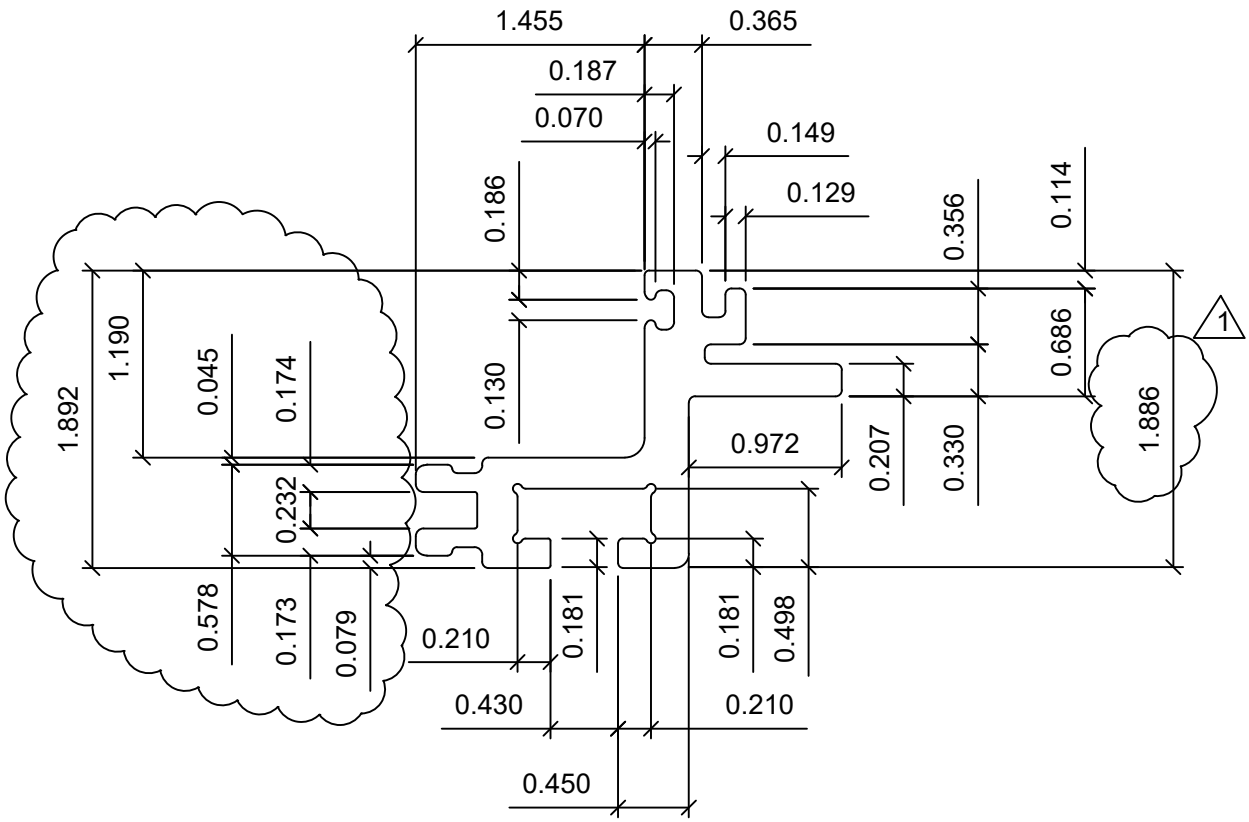

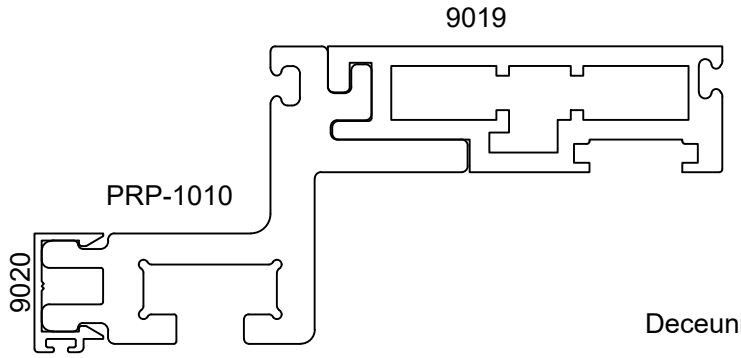

Deceuninck pert #D10000171

Drawings represent model as simulated

Quast Consulting & Testing Inc.

QCT-CMA-11298.01
02/25/19 Reviewer: SS

MATERIAL: DECEUNINCK ROVEX FIBERGLASS Baydur-PUL-2500

FreMarq Innovations
PO BOX 512
MERRILL, WI 54452
8300 HIGHLAND DR.
WAUSAU, WI 54401

NO.	DATE	DESCRIPTION
1	9/12/18	Revd connection legs and height

Project Name: Vent Window
DRAWN BY: TAF
DATE: 7-12-18

TOLERANCE: INDUSTRY STANDARD	Perimeter = 13.29 in.	AREA= 1.334 SQ.IN.	DRWG. NO.	PRP-1010

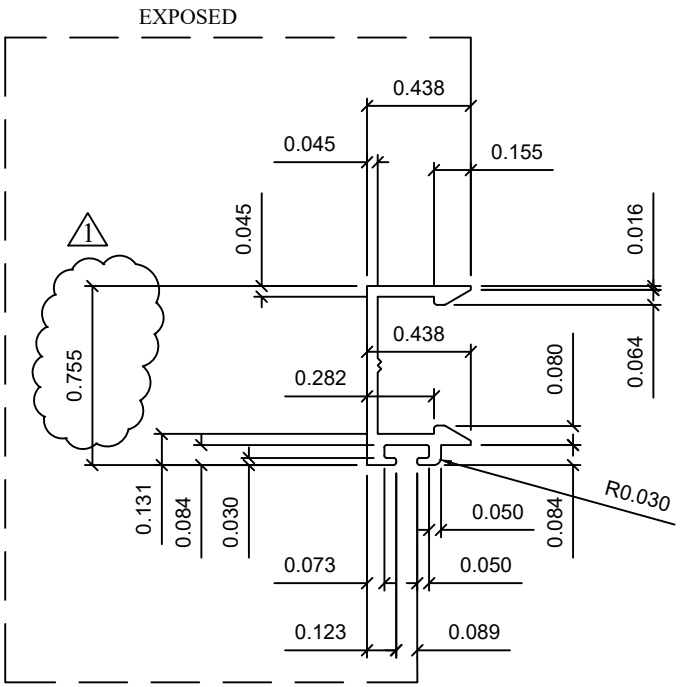

SCALE = 2X

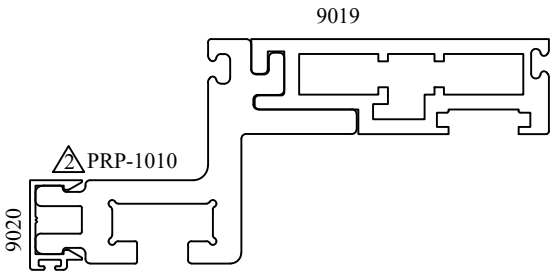

ASSEMBLY DETAIL
SHOWN ACTUAL SIZE

Drawings represent model as simulated

Quast Consulting & Testing Inc.

QCT-CMA-11298.01
02/25/19 Reviewer: SS

REV. NO.	DATE	DESCRIPTION
1	9/12/18	DECREASED OVERALL HEIGHT
2	10/16/18	CORRECTED ALUM. DIE #, PRP-1010 WAS PRP-1009

MATERIAL: ALUM ALLOY 6063-T6		
TOLERANCE: INDUSTRY STANDARD		
Perimeter = 3.541"	RADIUS: .015" UNO	
AREA= 0.084	WEIGHT= 0.100 lb/ft	

FreMarq Innovations
8300 Highland Drive
Wausau, WI 54401

TITLE:	SASH COVER
DRAWN BY:	TAF
DATE:	7-12-18
PART NO.	9020

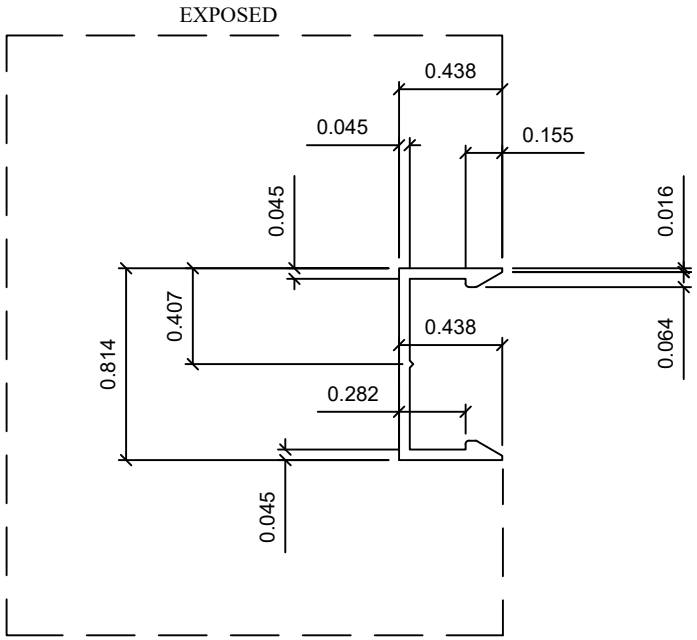

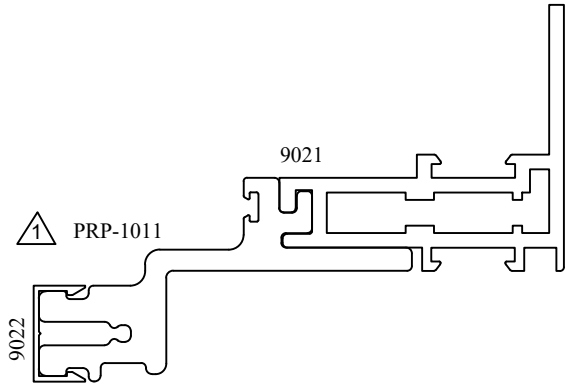

ASSEMBLY DETAIL
SHOWN ACTUAL SIZE

Drawings represent model as simulated

Quast Consulting & Testing Inc.

QCT-CMA-11298.01
02/25/19 Reviewer: SS

SCALE = 2X

NO.	DATE	DESCRIPTION
1	10/16/18	CORRECTED ALUM. DIE #, PRP-1011 WAS PRP-1009

MATERIAL: ALUM ALLOY 6063-T6	
TOLERANCE: INDUSTRY STANDARD	
Perimeter = 3.334"	RADIUS: .020" UNO
AREA= 0.077	WEIGHT= 0.092 lb/ft

FreMarq Innovations
8300 Highland Drive
Wausau, WI 54401

TITLE:	ZERO SIGHTLINE FRAME
DRAWN BY:	TAF
DATE:	7-12-18
PART NO.	9022

CUSTOMER APPROVAL:

DATE:

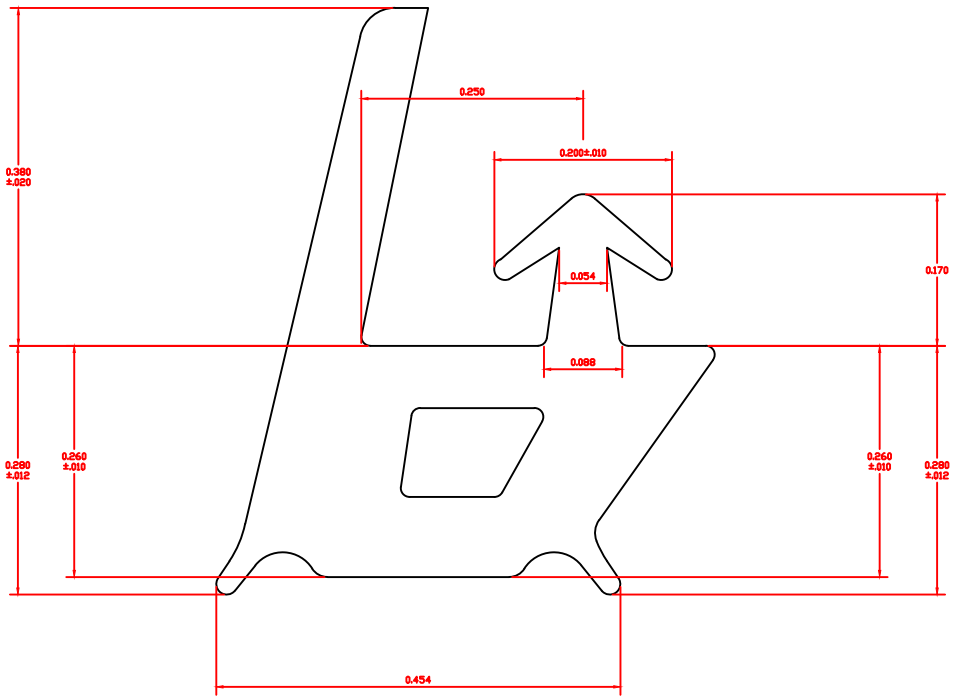

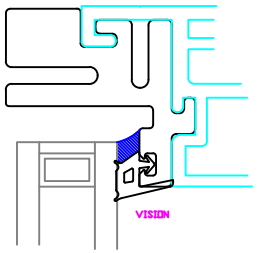

ACTUAL SIZE

REV.	REVISION DESCRIPTION	REV. DATE	BY

TRELLEBORG AURORA INDUSTIL STREETSBORO	TRELLEBORG PART NUMBER	13541-02-00	ISSUE DATE 10-4-17
	CUSTOMER PART NUMBER	GSK-1006	DRAWN BY MRG
	COMPOUND NUMBER	370555	SCALE 10X
	COMPOUND DESCRIPTION	70 DURO BLACK SILICONE	AREA .142

Tolerances are RMA Class II unless otherwise noted.

This drawing sheet and the contents herein are CONFIDENTIAL and PROPRIETARY information of Trelleborg-US. Reproduction or distribution of this information is forbidden without express written consent from Trelleborg-US.

PROCESS B

PROCESS A

MEASURE WITH CALIPERS

CHECK PART IN METAL

MUST FIT LOOSE IN METAL

MUST FIT TIGHT IN METAL

CHECK DART WITH CALIPERS

XXXXXX XXXXX XXXXXXXXXX

NO VISION SIDE

Drawings represent model as simulated

Quast Consulting & Testing INC.

QCT-CMA-11298.01

02/25/19 Reviewer: SS

CUSTOMER APPROVAL:

DATE:

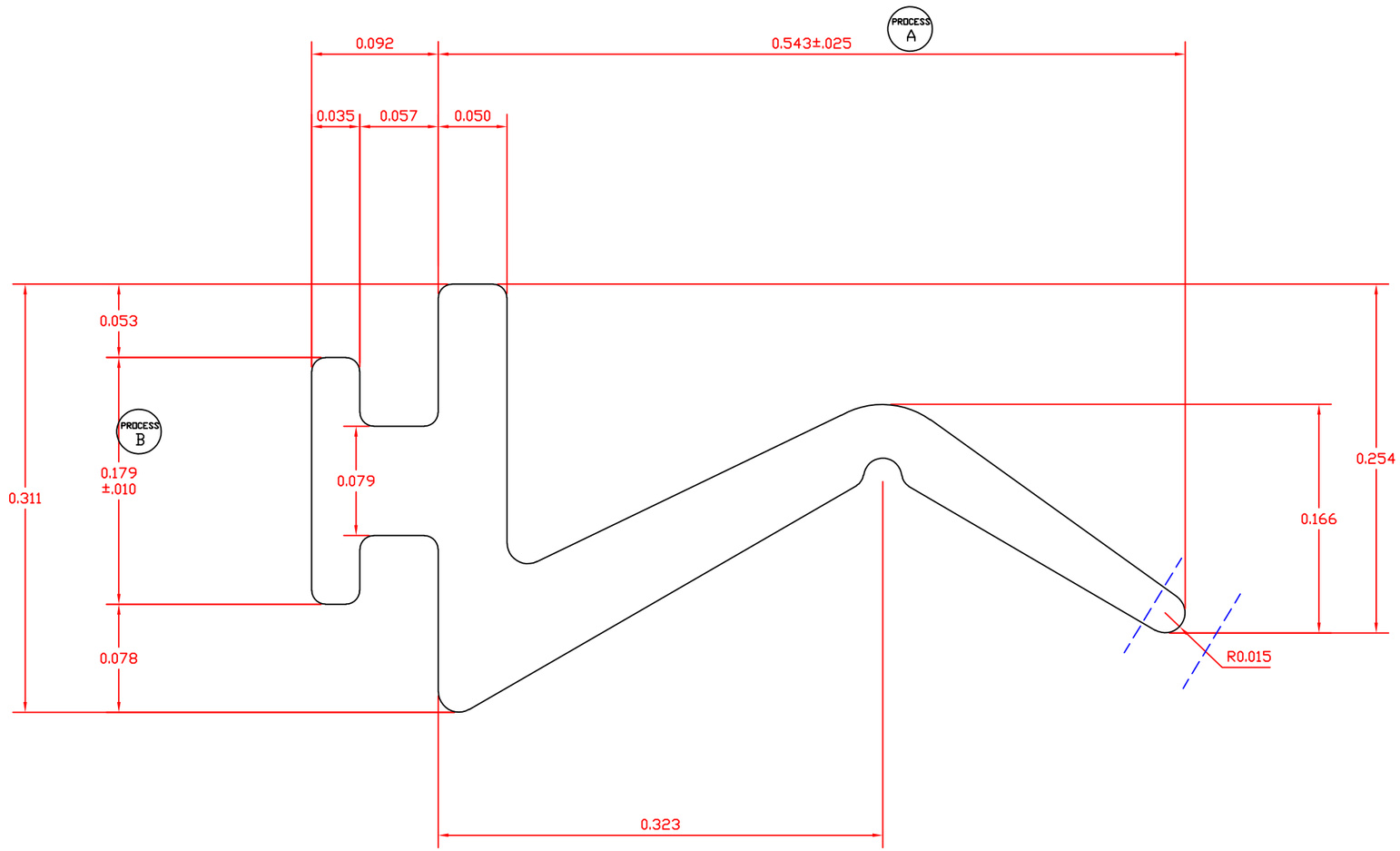

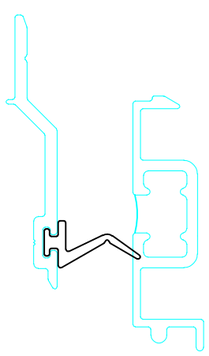

MATES W/
12914 MOLDED
CORNER

ACTUAL SIZE

Drawings represent model as simulated

Quast Consulting & Testing Inc.

QCT-CMA-11298.01
02/25/19 Reviewer: SS

GSK-1031

TRELLEBORG
AURORA
BRISTOL
STREETSBORO

TRELLEBORG PART NUMBER	12913-02-00	ISSUE DATE	11-2-16
CUSTOMER PART NUMBER	ES-P7531-G02A	DRAWN BY	MRG
COMPOUND NUMBER	370555	SCALE	10X
COMPOUND DESCRIPTION	70 DURO BLACK SILICONE	AREA	.054

REV.	REVISION DESCRIPTION	REV. DATE	BY

Tolerances are RMA Class II unless otherwise noted.

This drawing sheet and the contents herein are CONFIDENTIAL and PROPRIETARY information of Trelleborg-US. Reproduction or distribution of this information is forbidden without express written consent from Trelleborg-US.

CUSTOMER APPROVAL:

DATE:

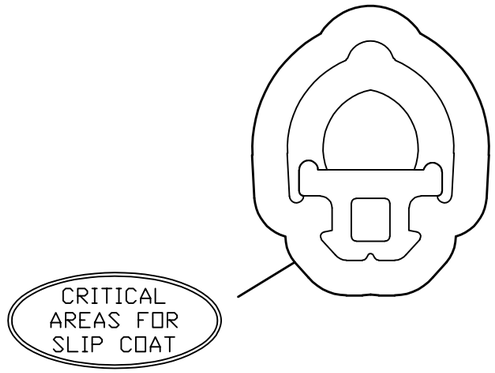

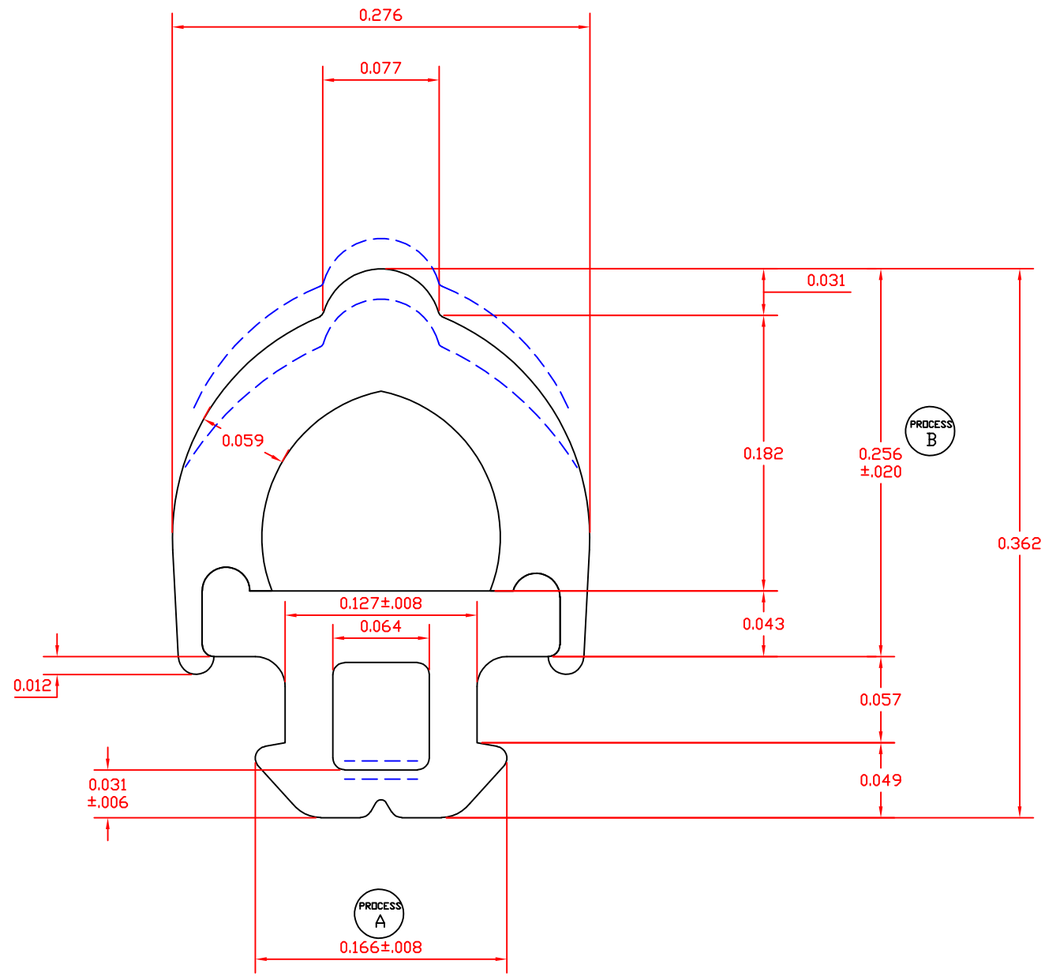

9518-02-00 U/M METERS - ADD SILICONE LUBE
9518-02-01 U/M FEET - ADD SILICONE LUBE
9518-02-02 NO LUBE
9518-02-03 T COAT - DRY LUBE

Drawings represent model as simulated

Quast Consulting & Testing Inc.

QCT-CMA-11298.01
02/25/19 Reviewer: SS

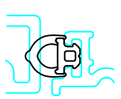

CHECK PART
IN METAL

ACTUAL SIZE

GSK-1030

REV.	REVISION DESCRIPTION	REV. DATE	BY

TRELLEBORG
AURORA
BRISTOL
STREETSBORO

TRELLEBORG PART NUMBER	9518-02-00	ISSUE DATE	8-31-11
CUSTOMER PART NUMBER	0-8507	DRAWN BY	MRG
COMPOUND NUMBER	270555/200510	SCALE	10X
COMPOUND DESCRIPTION	70 "A" / C509 CLOSED CELL EPDM	AREA	.021/.028

Tolerances are RMA Class II unless otherwise noted.

This drawing sheet and the contents herein are CONFIDENTIAL and PROPRIETARY information of Trelleborg-US. Reproduction or distribution of this information is forbidden without express written consent from Trelleborg-US.